GUGUEN Guillaume - Technical Portfolio

Introduction & Career Objective

To the Engineering Team,

I am a Mechatronics Engineer from INSA Rennes (France) with a specialization in autonomous aerial systems. I am seeking a 6 to 12-month engineering position in the Washington, D.C. area starting in September 2026. To facilitate a smooth integration, I have already secured housing in D.C. (16th St NW) and will be available for an immediate start without requiring relocation assistance.

Visa & Administrative Status: As a recent graduate (August 2026), I am fully eligible for the J-1 Intern Visa. This program is designed to be straightforward for U.S. employers; a designated third-party sponsor handles the legal paperwork and sponsorship, requiring minimal administrative involvement from your organization.

Technical Expertise: My background focuses on bridging the gap between mechanical design and autonomous control. In my current work at the French Defense Procurement Agency (DGA), I develop UAV control laws specifically Leader-Follower and Gs'ruff architectures using ROS2, PX4, and YOLO-based vision systems. Additionally, I manage the full manufacturing cycle for modular drone projects, from initial CAD design (CATIA/SolidWorks) to hardware integration and assembly.

This portfolio provides a visual overview of my recent technical achievements. I look forward to the possibility of discussing how my skills in control systems and mechatronics can support your team's objectives.

Guillaume Guguen *1926 16th St NW, Washington, DC 20009 guillaume.guguen@outlook.fr*

Mechanical Design & Precision Manufacturing (Exail Internship)

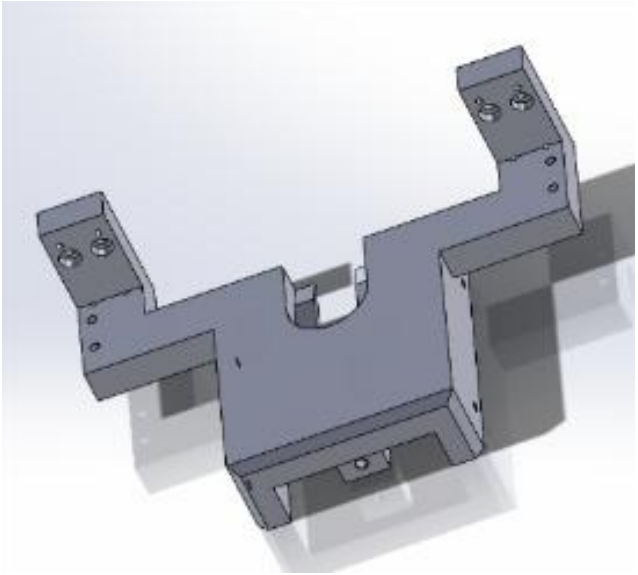

Final Machined Components: From Digital Prototype to High-Precision Hardware.

Project Overview: Optimization of a production bench for Fiber Bragg Gratings (FBG).

Key Achievements:

- Designed and machined custom mechanical interfaces using CAD (SolidWorks).
- Improved system reliability by selecting high-precision actuators and implementing 3D-printed prototypes.
- Managed the full transition from 3D modeling to physical part inspection and integration.

Autonomous Swarm Control & SITL Simulation (DGA Internship)

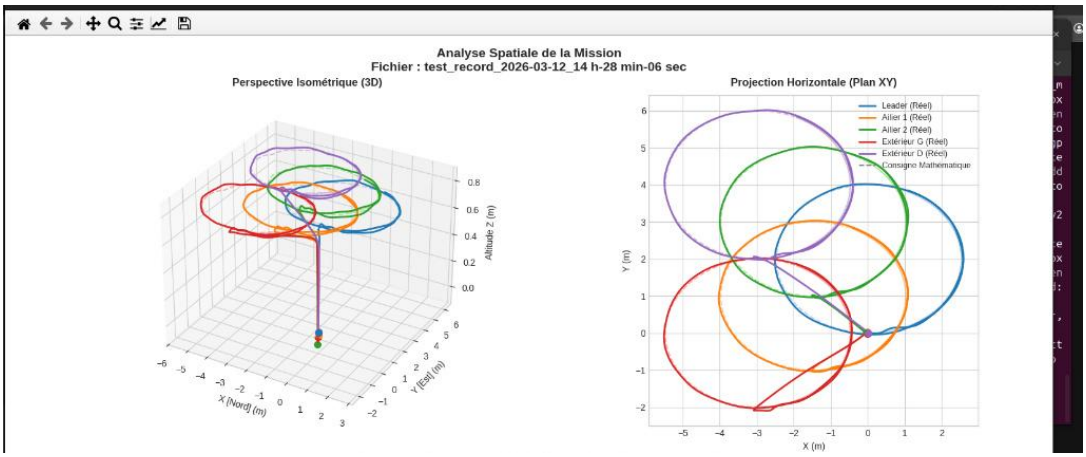

3D Spatial Mission Analysis: Multi-Agent Formation Flight Trajectories.

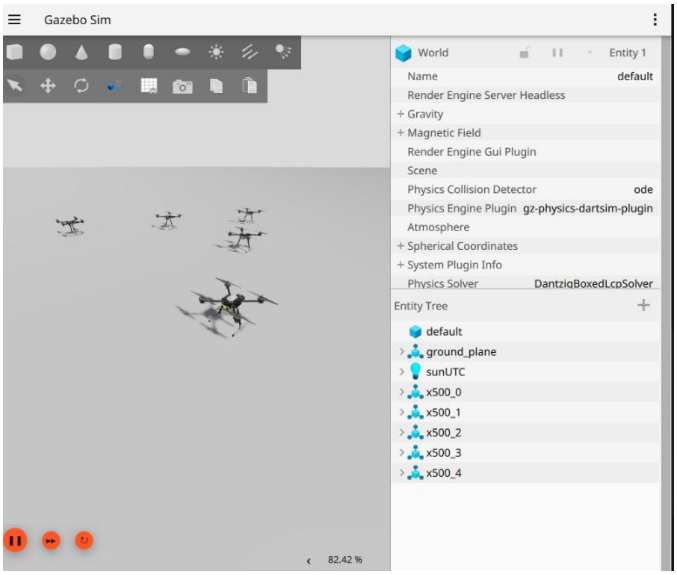

Gazebo Environment: Real-time Simulation of Leader-Follower & Gs'ruff Architectures.

Project Overview: Implementation of advanced control laws for drone formations in restricted environments.

Technical Implementation:

- Developed and validated Leader-Follower and Gs'ruff flight architectures using ROS2, PX4, and Python.
- Conducted high-fidelity SITL (Software-In-The-Loop) simulations within the Gazebo environment to optimize trajectory accuracy (Elliptical and formation paths).

Confidentiality Note: Specific source code and flight test videos are classified as "Restricted Disclosure and cannot be shared; however, simulation results demonstrate robust system stability and multi-agent coordination.

Modular AI-Based UAV Development (Current Project)

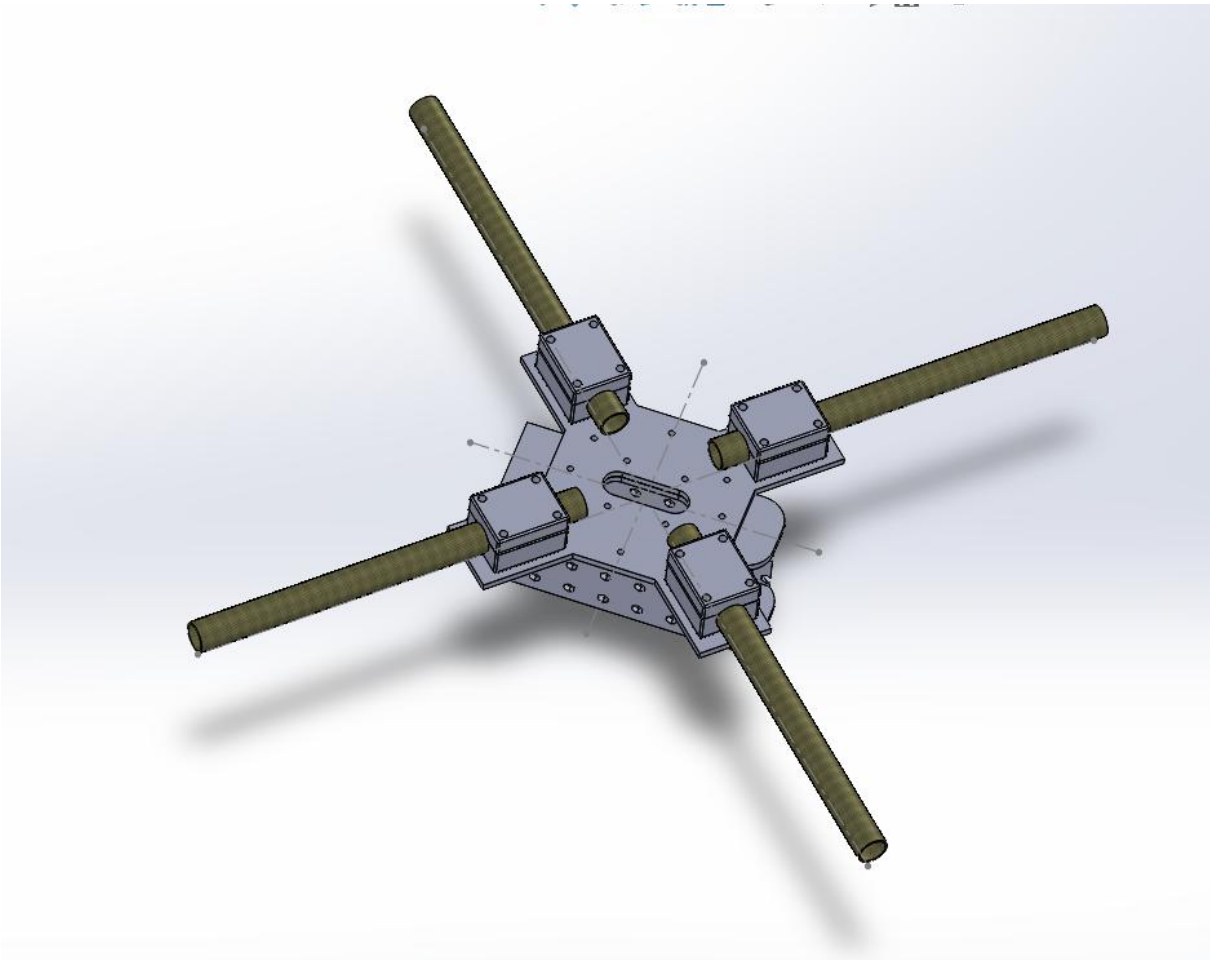

Modular UAV Airframe: Integrated AI-Ready Platform Design.

Project Overview: Leading the end-to-end design of a modular autonomous drone platform for AI-driven missions.

Design Philosophy:

- Created a modular mechanical frame in **CATIA/SolidWorks** allowing for rapid hardware swapping and maintenance.
- Integrating an AI-mission computer for real-time edge processing and autonomous decision-making.
- PX4 Autopilot & PixHawk hardware integration

Status: The project is currently in the advanced CAD and hardware integration phase. Full technical specifications are proprietary as development is ongoing.